Just manufacturing

Stainless Steel 18-3/8" x 18-3/8" x 8" Undermount Lavatory Sink

SPECIFICATIONS

Model(s) UCIR16-J

PRODUCT SPECIFICATIONS

Stainless Steel 18-3/8" x 18-3/8" x 8" Undermount Lavatory Sink. Sink is manufactured from 18 gauge 304 Stainless Steel with a Lustrous Satin finish, Center drain placement, and Bottom only pads.

Installation Type:	Undermount
Material:	304 Stainless Steel
Finish:	Lustrous Satin
Gauge:	18
Sound Deadening:	Bottom only pads
Number of Bowls:	1
Sink Dimensions:	18-3/8" x 18-3/8" x 8"
Bowl 1 Dimensions:	16" x 16" x 8"
Drain Size:	2" (51mm)
Drain Location:	Center
Minimum Cabinet Size:	24"
Mounting Hardware:	Not Included



Quality Grade Plumbing Products.

Since 1933 we have become the industry standard for designing and producing quality grade plumbing products and fixtures. Our role as an industry leader remains unsurpassed.

Product Compliance: ASME A112.19.3/CSA B45.4

Sinks are listed by IAPMO® as meeting the applicable requirements of the Uniform Plumbing Code®, International Plumbing Code®, and National Plumbing Code of Canada.

Clean and Care Manual (PDF)

Installation Instructions (PDF) - 2000000857

Warranty (PDF)

Installation Profile:

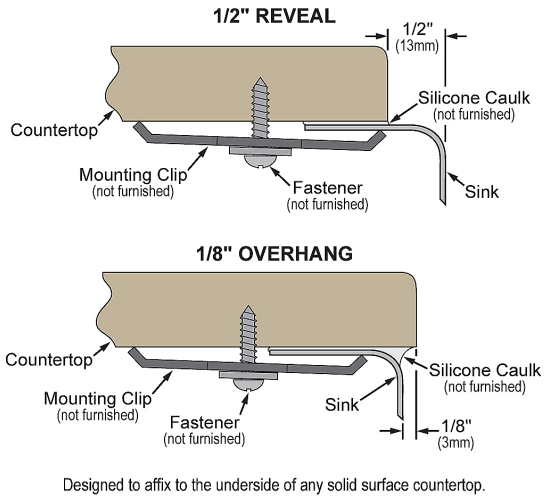

Designed to affix to the underside of any solid surface countertop.

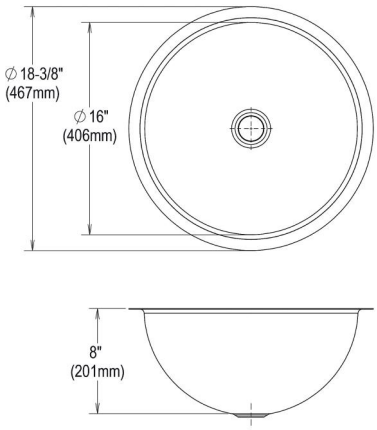

PART:_____QTY: _____

PROJECT:_____

CONTACT:_____

DATE:_____

NOTES:_____

APPROVAL:_____

In keeping with our policy of continuing product improvement, Just Mfg reserves the right to change product specifications without notice. Please visit justmfg.com for the most current version of Just Mfg product specification sheets. This specification describes a product with design, quality, and functional benefits to the user. When making a comparison of other producers' offerings, be certain these features are not overlooked.