Elkay Neptune Stainless Steel 15" x 15" x 5-3/16" 2-Hole Single Bowl Drop-in Sink + Faucet Kit
Model(s) NEPB1515LF

PRODUCT SPECIFICATIONS

Elkay Neptune Stainless Steel 15" x 15" x 5-3/16", 2-Hole Single Bowl Drop-in Sink + Faucet Kit. Sink is manufactured from 23 gauge 300 series Stainless Steel with a Buffed Satin finish, Center drain placement, and Bottom only pads.

Installation Type:	Drop-in, Sink Kits
Material:	300 series Stainless Steel
Finish:	Buffed Satin
Gauge:	23
Sound Deadening:	Bottom only pads
Number of Bowls:	1
Sink Dimensions:	15" x 15" x 5-3/16"
Bowl 1 Dimensions:	12" x 10" x 5"
Drain Size:	2" (51mm)
Drain Location:	Center
Minimum Cabinet Size:	18"
Mounting Hardware:	Part # 64090004 included for countertops up to 3/4" (19mm) thick
Template Included:	No
Cutout Template #:	1000001240

Template is available for download at elkay.com. CAD software will be required to open the template.

Cutout Dimensions for Drop-in Installation:
14-3/8" x 14-3/8" (365mm x 365mm) with 1-1/2" (38mm) corner radius

Installation Profile:

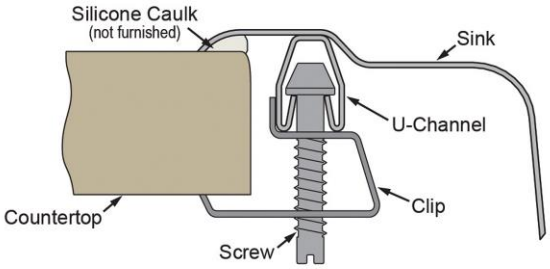

Included with Product: **LKA2475LF faucet, drain**

A Century of Tradition and Quality.
For more than 100 years, Elkay has been making innovative products and providing exceptional customer care. We take pride in offering plumbing products that make life easier, inspire change and leave the world a better place.

Product Compliance:	ASME A112.19.3/CSA B45.4
Faucet:	ASME A112.18.1/CSA B125.1 CEC NSF 372 (lead free) NSF 61
Accessory:	ASME A112.18.2/CSA B125.2

Clean and Care Manual (PDF)
Installation Instructions (PDF) - 1000005236
Installation Instructions (PDF) - LKA2475LF
Installation Instructions (PDF) - 1000005235_drain
Warranty (PDF)

PART:_____QTY: _____
PROJECT:_____
CONTACT:_____
DATE:_____
NOTES:_____
APPROVAL:_____

In keeping with our policy of continuing product improvement, Elkay reserves the right to change product specifications without notice. Please visit elkay.com for the most current version of Elkay product specification sheets. This specification describes an Elkay product with design, quality, and functional benefits to the user. When making a comparison of other producers' offerings, be certain these features are not overlooked.

© 2023

Elkay Neptune Stainless Steel 15" x 15" x 5-3/16" 2-Hole Single Bowl Drop-in Sink + Faucet Kit

Model(s) NEPB1515LF

Included Accessories		
D5018A	Dayton 2" Stainless Steel Drain with Removable Basket Strainer and Rubber Stopper Spec Sheet (PDF)	
LKA2475LF	Elkay 4" Centerset Deck Mount Faucet with Gooseneck Spout and Clear Crystalac Handles Chrome Spec Sheet (PDF)	

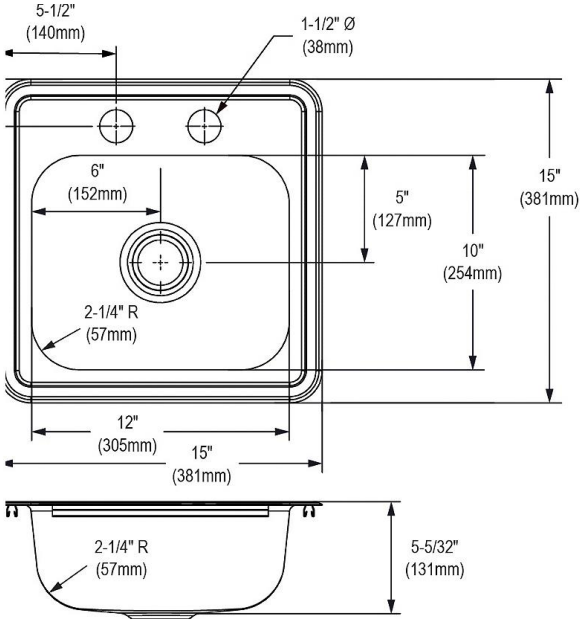

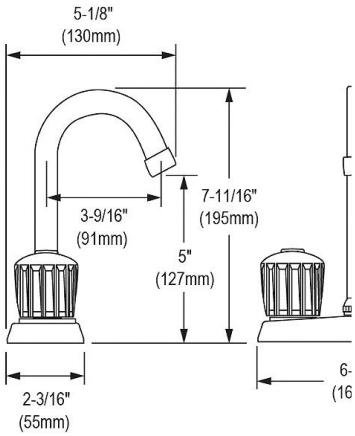

In keeping with our policy of continuing product improvement, Elkay reserves the right to change product specifications without notice. Please visit elkay.com for the most current version of Elkay product specification sheets. This specification describes an Elkay product with design, quality, and functional benefits to the user. When making a comparison of other producers' offerings, be certain these features are not overlooked.