Just manufacturing

Stainless Steel 48" x 20" x 11" Wall Hung Multi-Station 2-Hole Surgeon Scrub ADA Trough

SPECIFICATIONS

Model(s) JHADA4820-2S1H-J

PRODUCT SPECIFICATIONS

Stainless Steel 48" x 20" x 11" Wall Hung Multi-Station 2-Hole Surgeon Scrub ADA Trough. Sink is manufactured from 14 gauge 304 Stainless Steel with a Buffed Satin finish, Center drain placement.

Material:	304 Stainless Steel
Finish:	Buffed Satin
Gauge:	14
Weight Without Packaging:	66
Number of Bowls:	1
Sink Dimensions:	48" x 20" x 18-3/4"
Bowl 1 Dimensions:	45" x 16-1/2" x 6-1/2"
Drainboard Location:	No drainboard
Backsplash Height:	4.5
Drain Size:	3-1/2" (89mm)
Drain Location:	Center

Hole Drilling Configurations:

Hole #	Description
1	1 Faucet Hole Centered
2	2 Faucet Holes on 8" Centers
2S1H	2 Faucet Holes on 22" Centers
4	2 Sets of Faucet Holes on 8" Centers

Quality Grade Plumbing Products.
Since 1933 we have become the industry standard for designing and producing quality grade plumbing products and fixtures. Our role as an industry leader remains unsurpassed.

MADE IN USA

Product Compliance: ASME A112.19.3/CSA B45.4
ADA & ICC A117.1

Sinks are listed by IAPMO® as meeting the applicable requirements of the Uniform Plumbing Code®, International Plumbing Code®, and National Plumbing Code of Canada.

Complies with ADA & ICC A117.1 accessibility requirements when installed according to the requirements outlined in these standards.

Clean and Care Manual (PDF)
Installation Instructions (PDF) - 2000000893
Warranty (PDF)

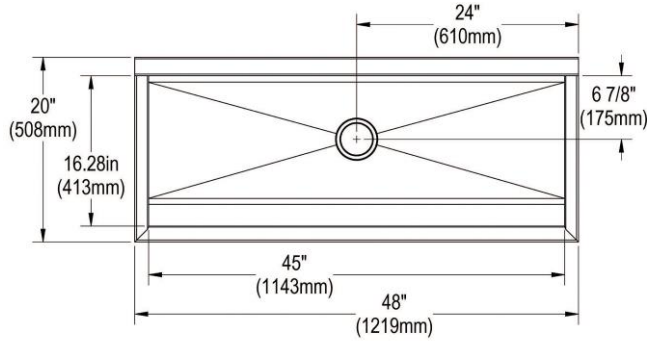

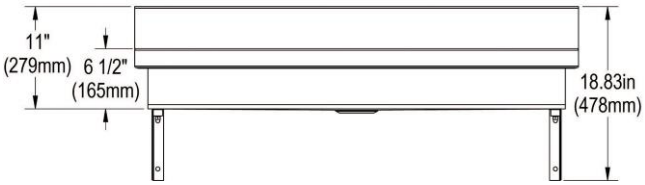

PART:_____QTY: _____

PROJECT:_____

CONTACT:_____

DATE:_____

NOTES:_____

APPROVAL:_____

In keeping with our policy of continuing product improvement, Just Mfg reserves the right to change product specifications without notice. Please visit justmfg.com for the most current version of Just Mfg product specification sheets. This specification describes a product with design, quality, and functional benefits to the user. When making a comparison of other producers' offerings, be certain these features are not overlooked.

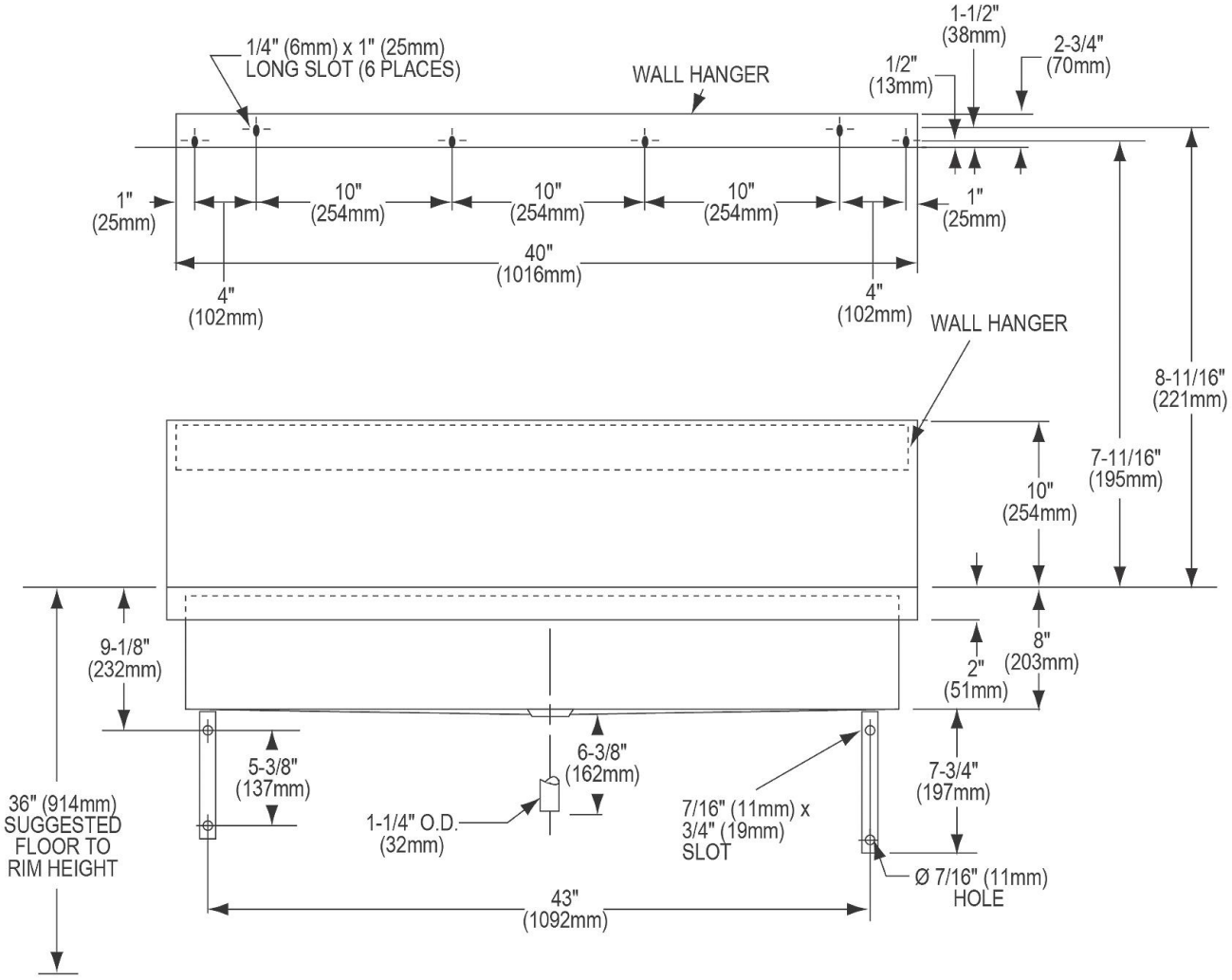

In keeping with our policy of continuing product improvement, Just Mfg reserves the right to change product specifications without notice. Please visit justmfg.com for the most current version of Just Mfg product specification sheets. This specification describes a product with design, quality, and functional benefits to the user. When making a comparison of other producers' offerings, be certain these features are not overlooked.