Just manufacturing

Stainless Steel 30" x 23" x 11" Wall Hung Single Bowl 1-Hole Surgeon Scrub Sink

SPECIFICATIONS

Model(s) J7701-NF-J

PRODUCT SPECIFICATIONS

Stainless Steel 30" x 23" x 11" Wall Hung Single Bowl 1-Hole Surgeon Scrub Sink. Sink is manufactured from 16 gauge 304 Stainless Steel with a Buffed Satin finish, Center drain placement.

Material:	304 Stainless Steel
Finish:	Buffed Satin
Gauge:	16
Weight Without Packaging:	55
Number of Bowls:	1
Sink Dimensions:	30" x 23" x 26"
Bowl 1 Dimensions:	26" x 16-1/4" x 11"
Drainboard Location:	No drainboard
Backsplash Height:	4
Drain Size:	3-1/2" (89mm)
Drain Location:	Center

Hole Drilling Configurations:

Hole #	Description
1	1 Faucet Hole Centered
2	2 Faucet Holes on 8" Centers
2-2	2 Sets of Faucet Holes on 8" Centers



Quality Grade Plumbing Products.
Since 1933 we have become the industry standard for designing and producing quality grade plumbing products and fixtures. Our role as an industry leader remains unsurpassed.

Product Compliance: ASME A112.19.3/CSA B45.4

Sinks are listed by IAPMO® as meeting the applicable requirements of the Uniform Plumbing Code®, International Plumbing Code®, and National Plumbing Code of Canada.

Clean and Care Manual (PDF)
Installation Instructions (PDF) - 2000000893
Installation Instructions (PDF) - 2000000894
Warranty (PDF)

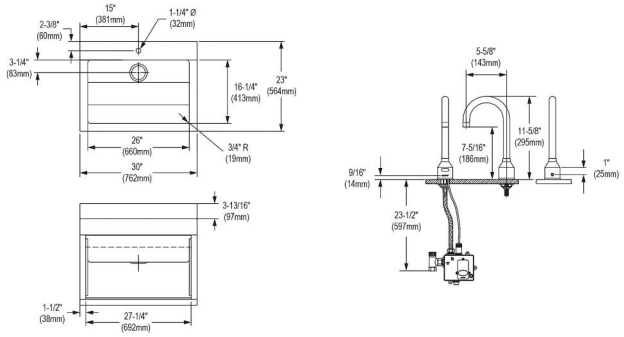

PART:_____QTY: _____

PROJECT:_____

CONTACT:_____

DATE:_____

NOTES:_____

APPROVAL:_____

In keeping with our policy of continuing product improvement, Just Mfg reserves the right to change product specifications without notice. Please visit justmfg.com for the most current version of Just Mfg product specification sheets. This specification describes a product with design, quality, and functional benefits to the user. When making a comparison of other producers' offerings, be certain these features are not overlooked.

© 2026

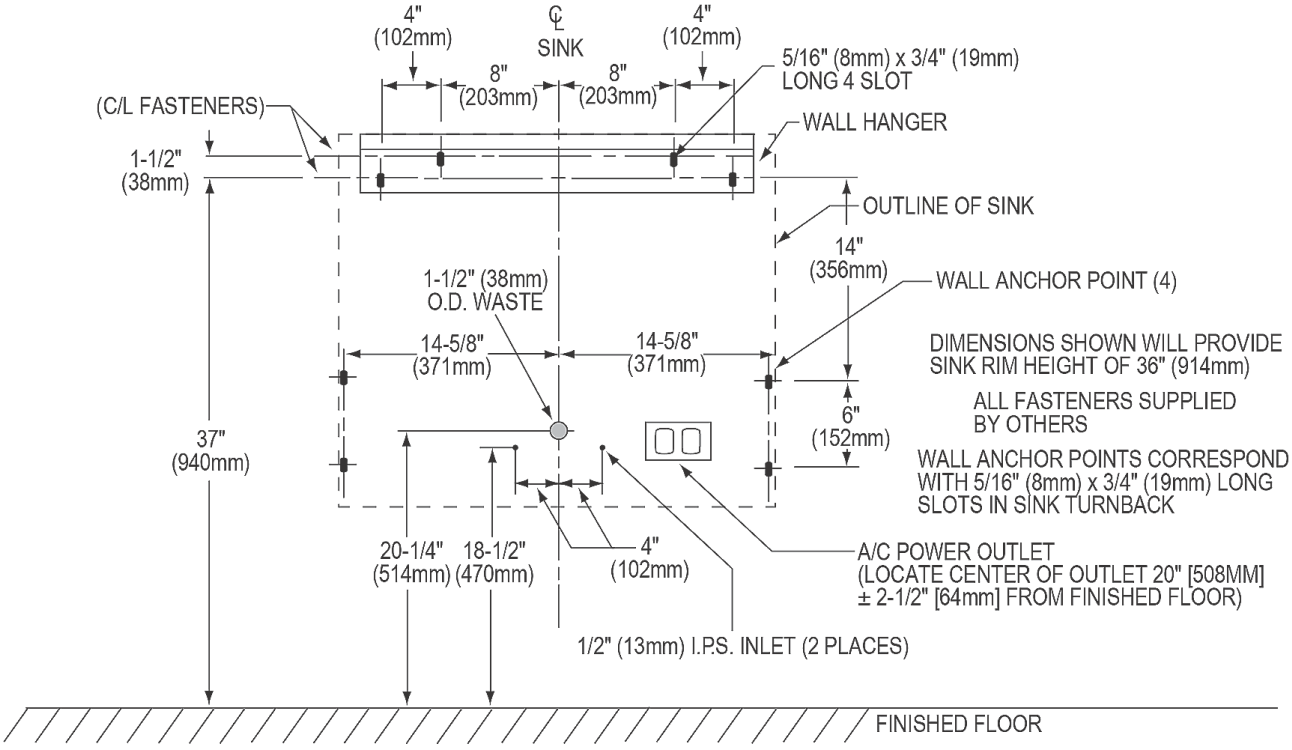

FIG. 1

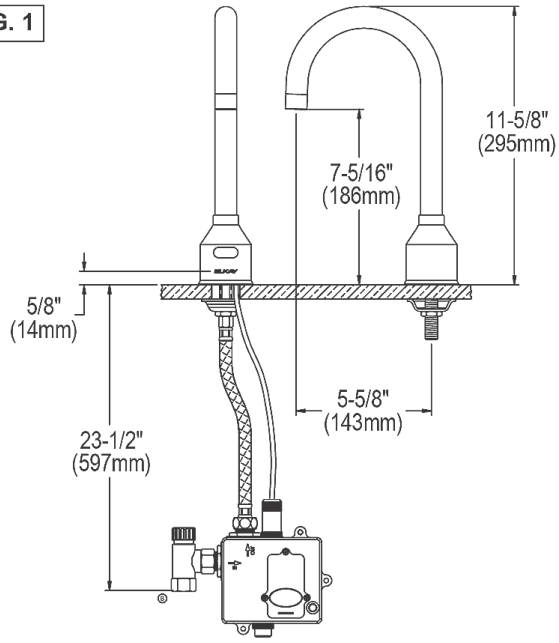

LKB721C SENSOR FAUCET

SINGLE STATION ROUGH-IN

FIG. 2

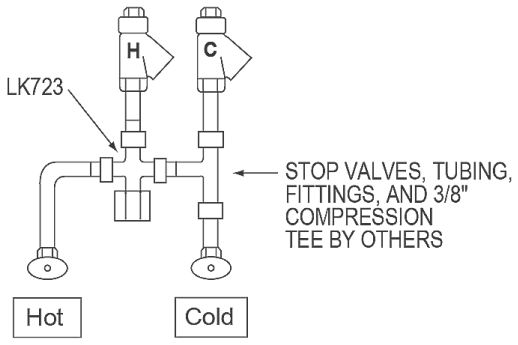

LKB721C SENSOR FAUCET WITH LK723 THERMOSTATIC MIXING VALVE

In keeping with our policy of continuing product improvement, Just Mfg reserves the right to change product specifications without notice. Please visit justmfg.com for the most current version of Just Mfg product specification sheets. This specification describes a product with design, quality, and functional benefits to the user. When making a comparison of other producers' offerings, be certain these features are not overlooked.