ELKAY
SPECIFICATIONS

Parkway™ 25" x 22" x 9" Stainless Steel 3-Hole Single Bowl Drop-in Sink

Model(s) HDSB252293PW

PRODUCT SPECIFICATIONS

Parkway™ 25" x 22" x 9" Stainless Steel 3-Hole Single Bowl Drop-in Sink. Sink is manufactured from 20 gauge 300 series Stainless Steel with a Stainless Steel (S)finish, Sides and Bottom pads.

Installation Type:	Drop-in
Material:	300 series Stainless Steel
Finish:	Stainless Steel (S)
Gauge:	20
Sound Deadening:	Sides and Bottom pads
Number of Bowls:	1
Sink Dimensions:	25" x 22" x 9"
Minimum Cabinet Size:	30"
Mounting Hardware:	Included
Template Included:	Yes
Cutout Template #:	1000001188

Template is available for download at elkay.com. CAD software will be required to open the template.

Cutout Dimensions for Drop-in Installation:
24-3/8" x 21-3/8" (619mm x 543mm) with 1-1/2" (38mm) corner radius

Installation Profile:

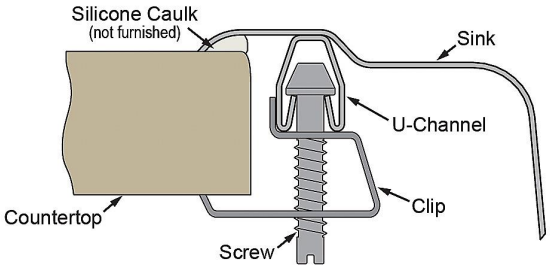



A Century of Tradition and Quality.
For more than 100 years, Elkay has been making innovative products and providing exceptional customer care. We take pride in offering plumbing products that make life easier, inspire change and leave the world a better place.

Product Compliance: ASME A112.19.3/CSA B45.4

Sinks are listed by IAPMO® as meeting the applicable requirements of the Uniform Plumbing Code®, International Plumbing Code®, and National Plumbing Code of Canada.

Clean and Care Manual (PDF)
Installation Instructions (PDF) - 1000005236
Warranty (PDF)

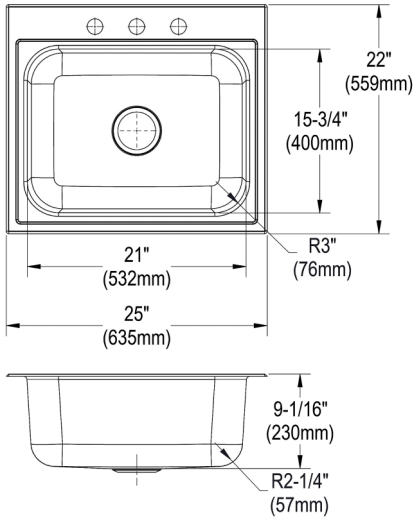

PART:_____QTY: _____
PROJECT:_____
CONTACT:_____
DATE:_____
NOTES:_____
APPROVAL:_____

In keeping with our policy of continuing product improvement, Elkay reserves the right to change product specifications without notice. Please visit elkay.com for the most current version of Elkay product specification sheets. This specification describes an Elkay product with design, quality, and functional benefits to the user. When making a comparison of other producers' offerings, be certain these features are not overlooked.