Just manufacturing

SPECIFICATIONS

Stainless Steel 36" x 22" x 6-1/2" Drop-in 16 Gauge Lavatory Sink
Model(s) HAS2236-1-J

PRODUCT SPECIFICATIONS

Stainless Steel 36" x 22" x 6-1/2" Drop-in 16 Gauge Lavatory Sink. Sink is manufactured from 16 gauge 304 Stainless Steel with a Buffed Satin finish, Rear Left drain placement, and Sides and Bottom pads.

Material:	304 Stainless Steel
Finish:	Buffed Satin
Gauge:	16
Weight Without Packaging:	22
Sound Deadening:	Sides and Bottom pads
Number of Bowls:	1
Sink Dimensions:	36" x 22" x 6-1/2"
Bowl 1 Dimensions:	33" x 16-1/2" x 6-1/2"
Drainboard Location:	No drainboard
Drain Size:	3-1/2" (89mm)
Drain Location:	Rear Left
Minimum Cabinet Size:	39"

Hole #	Description
1	1 Faucet Hole Centered
2	2 Faucet Holes on 8" Centers
4	2 Sets of Faucet Holes on 8" Centers

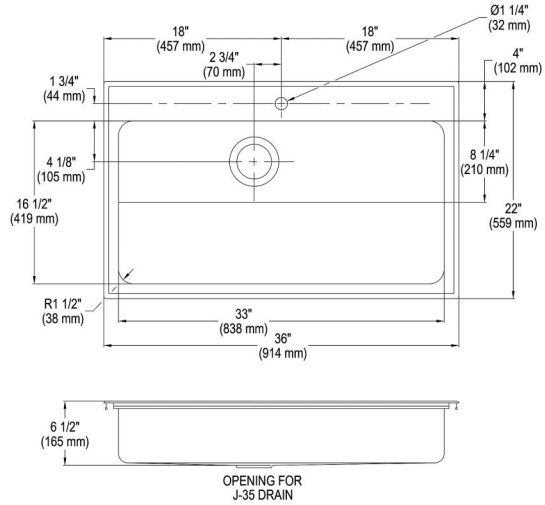

Quality Grade Plumbing Products.
Since 1933 we have become the industry standard for designing and producing quality grade plumbing products and fixtures. Our role as an industry leader remains unsurpassed.

MADE IN USA

Product Compliance: ASME A112.19.3/CSA B45.4
ADA & ICC A117.1

Sinks are listed by IAPMO® as meeting the applicable requirements of the Uniform Plumbing Code®, International Plumbing Code®, and National Plumbing Code of Canada.

Complies with ADA & ICC A117.1 accessibility requirements when installed according to the requirements outlined in these standards.

Clean and Care Manual (PDF)
Installation Instructions (PDF) - 2000000856
Warranty (PDF)

PART:_____QTY: _____

PROJECT:_____

CONTACT:_____

DATE:_____

NOTES:_____

APPROVAL:_____

In keeping with our policy of continuing product improvement, Just Mfg reserves the right to change product specifications without notice. Please visit justmfg.com for the most current version of Just Mfg product specification sheets. This specification describes a product with design, quality, and functional benefits to the user. When making a comparison of other producers' offerings, be certain these features are not overlooked.

© 2025

In keeping with our policy of continuing product improvement, Just Mfg reserves the right to change product specifications without notice. Please visit justmfg.com for the most current version of Just Mfg product specification sheets. This specification describes a product with design, quality, and functional benefits to the user. When making a comparison of other producers' offerings, be certain these features are not overlooked.

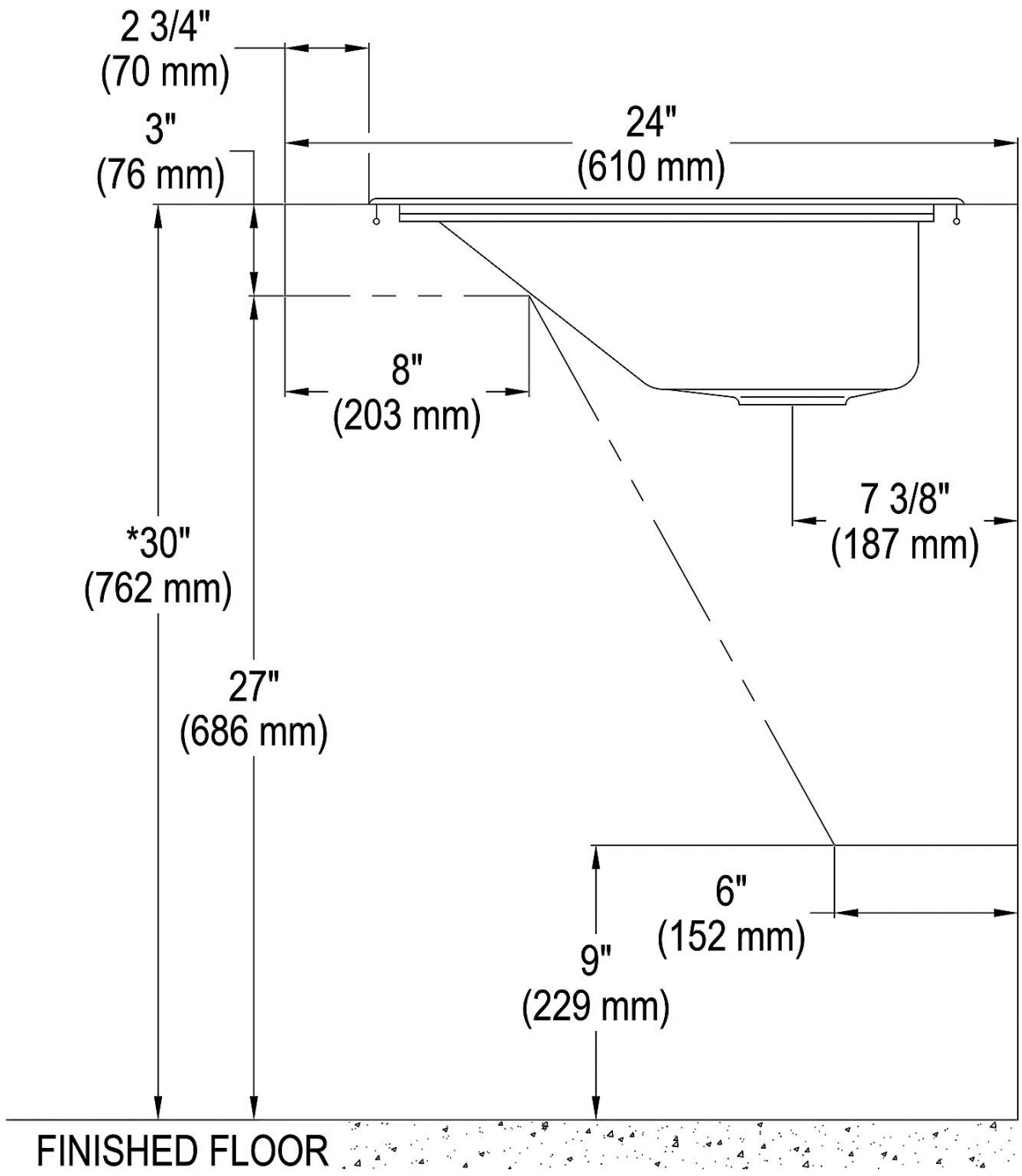

*NOTE: ALTERING THIS DIMENSION COULD CAUSE SINK TO BECOME NON-ADA COMPLIANT

In keeping with our policy of continuing product improvement, Just Mfg reserves the right to change product specifications without notice. Please visit justmfg.com for the most current version of Just Mfg product specification sheets. This specification describes a product with design, quality, and functional benefits to the user. When making a comparison of other producers' offerings, be certain these features are not overlooked.