ELKAY®
SPECIFICATIONS

Elkay SwirlFlo Hands-free Activation ADA Fountain with Mounting Frame Non-filtered Refrigerated Stainless
Model ENOBM8K

PRODUCT SPECIFICATIONS

Elkay SwirlFlo® Hands-free Activation ADA Fountain with Mounting Frame Non-filtered Refrigerated Stainless. Chilling Capacity of 8.0 GPH (gallons per hour) of 50° F drinking water, based on 80° F inlet water and 90° F ambient, per ASHRAE 18 testing. Features shall include Hands Free. Furnished with Flexi-Guard ® Safety Bubbler. Electronic Sensor Bubbler activation. Product shall be Wall Mount (Inwall Frame/Plate), for Indoor applications, serving 1 station(s). Unit shall be certified to UL 399 and CAN/CSA C22.2 No. 120.

Special Features:	Hands Free
Finish:	Stainless Steel
Power:	115V/60Hz
Bubbler Style:	Flexi-Guard ® Safety Bubbler
Activation by:	Electronic Sensor Bubbler
Mounting Type:	Wall Mount (Inwall Frame/Plate)
Chilling Capacity*:	8.0 GPH
Full Load Amps	4.5
Rated Watts:	370
Dimensions (L x W x H):	38-1/2" x 19" x 40-13/16"
Approx. Shipping Weight:	93 lbs.
Installation Location:	Indoor
No. of Stations Served:	1
*Based on 80° F inlet water & 90° F ambient air temp for 50° F chilled drinking water.	

COOLING SYSTEM

- Compressor: Hermetically-sealed, reciprocating type, single phase. Sealed-in lifetime lubrication.
- Condenser: Fan cooled, copper tube with aluminum fins. Fan motor is permanently lubricated.
- Cooling Unit: Combination tube-tank type. Continuous copper tubing with is fully insulated with EPS foam that meets UL requirements for self-extinguishing material.
- Refrigerant Control: Refrigerant R-134a is controlled by accurately calibrated capillary tube.
- Temperature Control: Easily accessible enclosed adjustable thermostat is factory preset. Requires no adjustment other than for altitude requirements.

PART:_____QTY: _____

PROJECT:_____

CONTACT:_____

DATE:_____

NOTES:_____

APPROVAL:_____

Included with Product: **Fountain, Chiller, Mounting Frame**

▼ Ships in multiple boxes.

A Century of Tradition and Quality.
For more than 100 years, Elkay has been making innovative products and providing exceptional customer care. We take pride in offering plumbing products that make life easier, inspire change and leave the world a better place.

PRODUCT COMPLIANCE

ADA & ICC A117.1

ASME A112.19.3/CSA B45.4

Buy American Act

CAN/CSA C22.2 No. 120

NSF/ANSI 61 (Q≤1) & 372 (lead free)

UL 399

Complies with ADA & ICC A117.1 accessibility requirements when installed according to the requirements outlined in these standards. Installation may require additional components and/or construction features to be fully compliant. Consult the local Authority Having Jurisdiction if necessary.

Installation Instructions (PDF) - 1000003097
Installation Instructions (PDF) - 98004C
Installation Instructions (PDF) - 97153C

5 Year Limited Warranty on the refrigeration system of the unit. Electrical components and water system are warranted for 12 months from date of installation. **Warranty pertains to drinking water applications only. Non-drinking water applications are not covered under warranty.**

Warranty (PDF)

In keeping with our policy of continuing product improvement, Elkay reserves the right to change product specifications without notice. Please visit elkay.com for the most current version of Elkay product specification sheets. This specification describes an Elkay product with design, quality, and functional benefits to the user. When making a comparison of other producers' offerings, be certain these features are not overlooked.

Optional Accessories		
EWF172	Elkay Universal Filtration Kit (1500-Gallon) Spec Sheet (PDF)	
97446C	Bubbler Kit Vandal-Resistant Spec Sheet (PDF)	
98481C	Bubbler Kit Water-Efficient Vandal-Resistant Spec Sheet (PDF)	

In keeping with our policy of continuing product improvement, Elkay reserves the right to change product specifications without notice. Please visit elkay.com for the most current version of Elkay product specification sheets. This specification describes an Elkay product with design, quality, and functional benefits to the user. When making a comparison of other producers' offerings, be certain these features are not overlooked.

Elkay SwirlFlo Hands-free Activation ADA Fountain with Mounting Frame Non-filtered Refrigerated Stainless
Model ENOBM8K

These products are designed to operate on 20 psi to 105 psi supply line pressure.

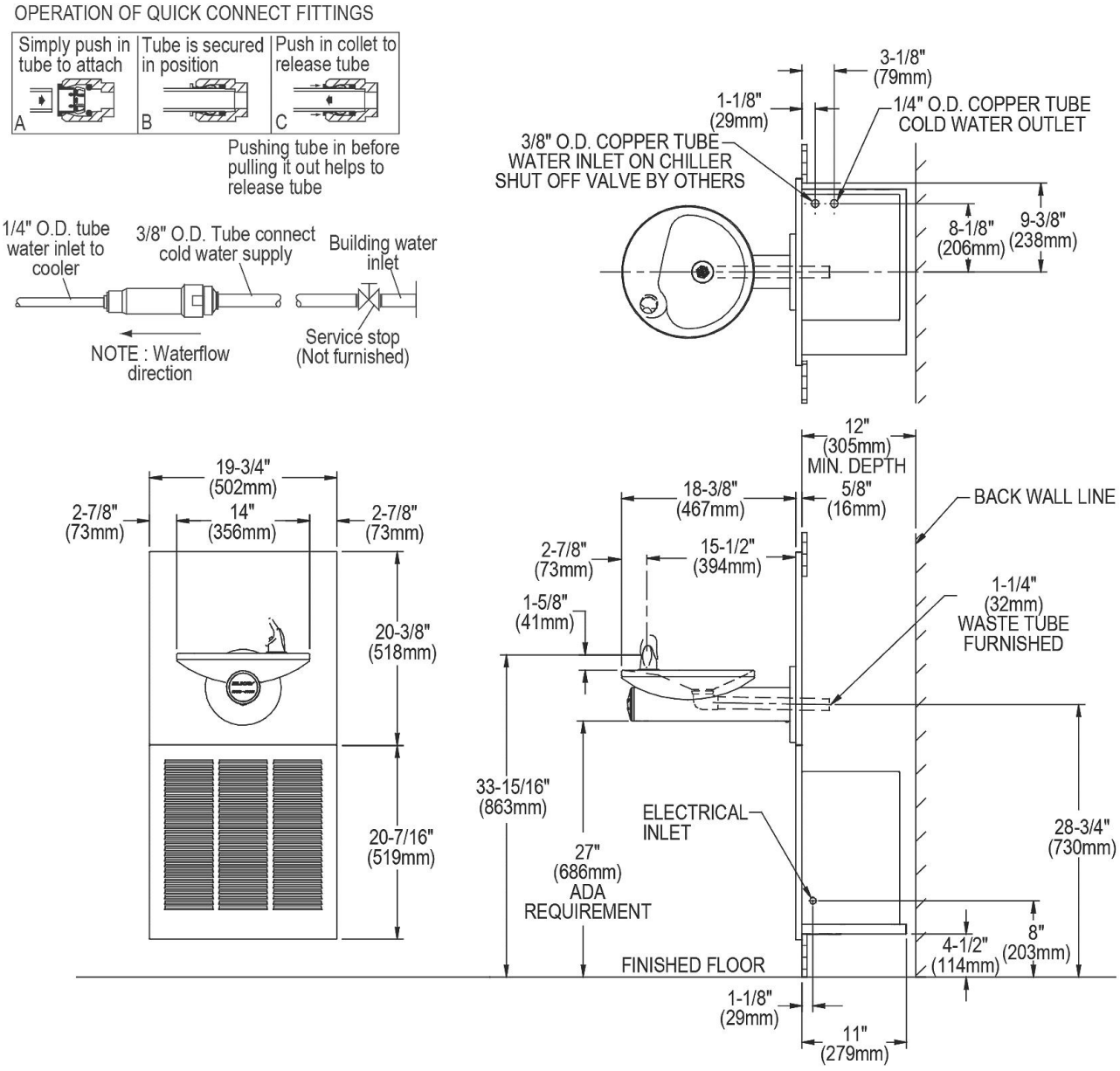

NOTE: New installations must use Ground Fault Circuit Interrupter (GFCI). It is highly recommended that the circuit be dedicated and the load protection be sized for 20 amps.

In keeping with our policy of continuing product improvement, Elkay reserves the right to change product specifications without notice. Please visit elkay.com for the most current version of Elkay product specification sheets. This specification describes an Elkay product with design, quality, and functional benefits to the user. When making a comparison of other producers' offerings, be certain these features are not overlooked.

Elkay SwirlFlo Hands-free Activation ADA Fountain with Mounting Frame Non-filtered Refrigerated Stainless
Model ENOBM8K

IMPORTANT!
INSTALLER PLEASE NOTE:

The grounding of electrical equipment such as telephone, computers, etc., to water lines is a common procedure. This grounding may be in the building or may occur away from the building. This grounding can cause electrical feedback into a water cooler, creating an electrolysis which causes a metallic taste or causes an increase in the metal content of the water. This condition is avoidable by using the proper materials as indicated below.

The drain fitting which are provided by the installer should also be plastic to eletrically isolate the cooler from the building plumbing system.

THIS DRINKING FOUNTAIN IS FURNISHED WITH A BUBBLER AND VALVE INCLUDING ALL CONNECTING FITTINGS WHICH ARE MANUFACTURED OF COMPLETELY LEAD FREE MATERIAL. SHUTOFF VALVE (NOT FURNISHED) TO ACCEPT 3/8" O.D. UNPLATED COPPER TUBE.

WALL OPENING

IMPORTANT: It is necessary to create a wall opening 18 ¾" W x 37 ¾" H and 4 ½" above the floor line.

ELECTRICAL DATA

Electrical outlet, three (3) conductor grounded. Locate within safe reach of power cord.

MOUNTING INSTRUCTIONS

Refer to rough-in for location of plumbing and electrical sources. The support frame is to be installed first. Hang upper panel to hanger on frame. Fountains are to be attached to panel and wall frame. Water service lines, waste lines and electrical are assembled as required. Perform a final check for leaks and correct functions of fountains and chiller. (For details see the installation instructions.)

Installation requires trap to be installed in wall. Trap and service stop not included.

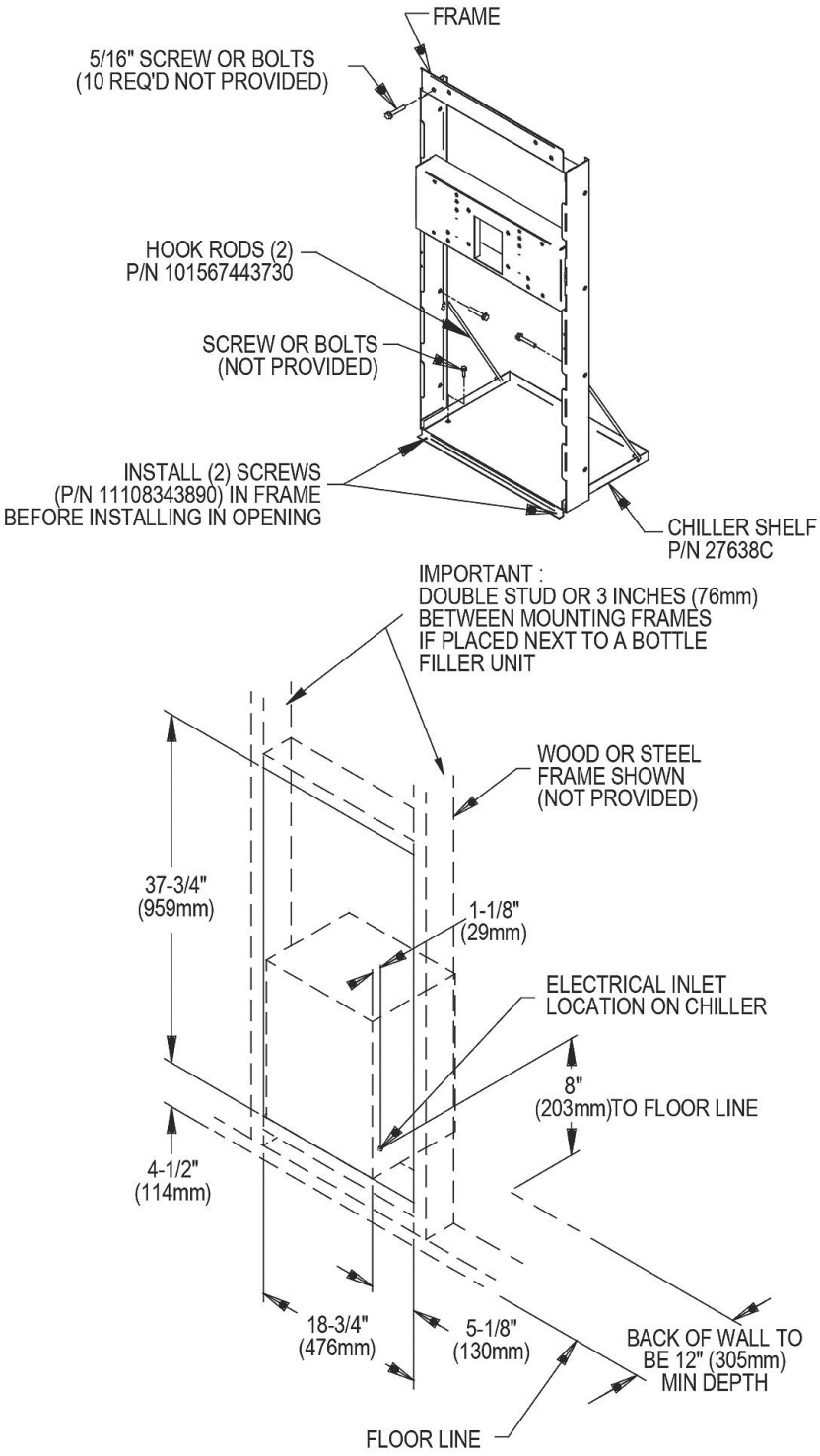

In keeping with our policy of continuing product improvement, Elkay reserves the right to change product specifications without notice. Please visit elkay.com for the most current version of Elkay product specification sheets. This specification describes an Elkay product with design, quality, and functional benefits to the user. When making a comparison of other producers' offerings, be certain these features are not overlooked.