ELKAY®
SPECIFICATIONS

Elkay Quartz Classic 32-1/2" x 20" x 10" 60/40 Double Bowl Undermount Sink
Model(s) ELGHU3220R

PRODUCT SPECIFICATIONS

Elkay Quartz Classic® 32-1/2" x 20" x 10" 60/40 Double Bowl Undermount Sink. Sink is molded with up to 80% natural quartz and high performance acrylic resins that are non-porous providing superior heat, scratch, fade and stain resistance. Naturally sound deadening and Rear Center drain placement.

A Century of Tradition and Quality.
For more than 100 years, Elkay has been making innovative products and providing exceptional customer care. We take pride in offering plumbing products that make life easier, inspire change and leave the world a better place.

KBB READERS' CHOICE AWARDS 2023

Product Compliance: CSA B45.5/IAPMO Z124

Sinks are listed by IAPMO® as meeting the applicable requirements of the Uniform Plumbing Code®, International Plumbing Code®, and National Plumbing Code of Canada.

Installation Type:	Undermount
Material:	Quartz
Number of Bowls:	2
Sink Dimensions:	32-1/2" x 20" x 10"
Bowl 1 Dimensions:	17-9/16" x 17-3/4" x 10"
Bowl 2 Dimensions:	11-1/2" x 16-13/16" x 10"
Drain Size:	3-1/2" (89mm)
Drain Location:	Rear Center
Minimum Cabinet Size:	36"
Mounting Hardware:	Part # 54300408 included
Template Included:	Yes
Cutout Template #:	1000003464

Template is available for download at elkay.com. CAD software will be required to open the template.

Clean and Care Manual (PDF)
Installation Instructions (PDF) - 1000005238
Warranty (PDF)

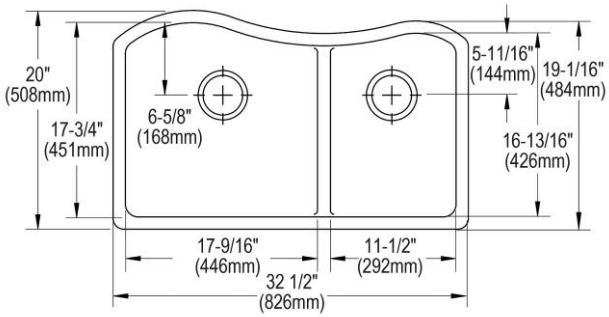

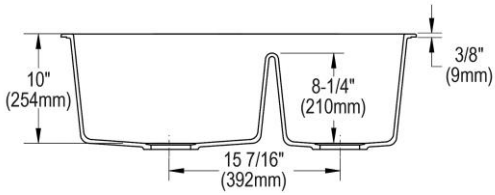

Installation Profile:

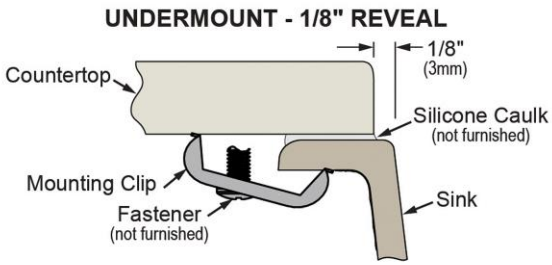

Designed to affix to the underside of any solid surface countertop.

PART:_____QTY: _____

PROJECT:_____

CONTACT:_____

DATE:_____

NOTES:_____

APPROVAL:_____

In keeping with our policy of continuing product improvement, Elkay reserves the right to change product specifications without notice. Please visit elkay.com for the most current version of Elkay product specification sheets. This specification describes an Elkay product with design, quality, and functional benefits to the user. When making a comparison of other producers' offerings, be certain these features are not overlooked.

© 2023

Elkay Quartz Classic 32-1/2" x 20" x 10" 60/40 Double Bowl Undermount Sink

Model(s) ELGHU3220R

Optional Accessories		
LKOBG1016SS	Elkay Stainless Steel 9-5/8" x 14-5/8" x 1" Bottom Grid Spec Sheet (PDF)	
LKOBG1617SS	Elkay Stainless Steel 15-11/16" x 15-1/2" x 1" Bottom Grid Spec Sheet (PDF)	
LK99	Elkay Deluxe 3-1/2" Drain Type 304 Stainless Steel Body Strainer Basket Rubber Seal and Tailpiece Spec Sheet (PDF)	
LKQD35	Elkay Polymer 3-1/2" Disposer Flange with Removable Basket Strainer and Rubber Stopper Spec Sheet (PDF)	
LKQS35	Elkay Polymer 3-1/2" Drain Fitting with Removable Basket Strainer and Rubber Stopper Spec Sheet (PDF)	
LKEC2031	Elkay Explore Single Hole Kitchen Faucet with Pull-down Spray and Forward Only Lever Handle Spec_Sheet (PDF)	
LK6000	Elkay Everyday Single Hole Deck Mount Kitchen Faucet with Pull-down Spray Forward Only Lever Handle Spec_Sheet (PDF)	

In keeping with our policy of continuing product improvement, Elkay reserves the right to change product specifications without notice. Please visit elkay.com for the most current version of Elkay product specification sheets. This specification describes an Elkay product with design, quality, and functional benefits to the user. When making a comparison of other producers' offerings, be certain these features are not overlooked.