INSTALLATION INSTRUCTIONS

ER30
Refrigeration Package

Note: Danger! Electric shock hazard. Disconnect power before servicing unit.

Uses HFC-134A refrigerant

NOTICE: This water cooler must be connected to the water supply using a dielectric coupling.

IMPORTANT! INSTALLER PLEASE NOTE.

The grounding of electrical equipment such as telephone, computers, etc., to water lines is a common procedure. This grounding may be in the building, or may occur away from the building. This grounding can cause electrical feedback into a water chiller, creating an electrolysis which causes a metallic taste or an increase in the metal content of the water. This condition is avoidable by using the proper materials indicated below.

INSTALLATION

1. This unit is intended for remote installation only. It is important to insure proper ventilation. A minimum of 6 inches (152mm) to the front must be maintained, and 6 inches (152mm) to the rear of the unit.
2. This chiller has been designed for use with potable water and includes an o-ring seal on the drain plug. This fitting should be replaced if the unit is to be used with more aggressive fluids.
3. Connecting lines to be made of copper. Thoroughly flush all lines to remove all foreign matter before connecting to cooler. If flushing does not remove all particles, a water strainer should be installed in the supply line.
4. Connect cooler to building supply with a shut-off valve and install a union connection between the valve and the cooler.
5. Electrical: Make sure power supply is identical in voltage, cycle, and phase to that specified on cooler serial plate. Never wire the compressor directly to the power supply.
6. For use with photo processing applications, adjust thermostat to warmer settings.

START UP

1. Open supply line valve.
2. Purge all air from all water lines by operating bubbler valve of fountain to which cooler is connected. A steady stream assures that all air is removed.
3. Rotate fan blade to assure proper clearance and free action.
4. Connect to proper electrical power.

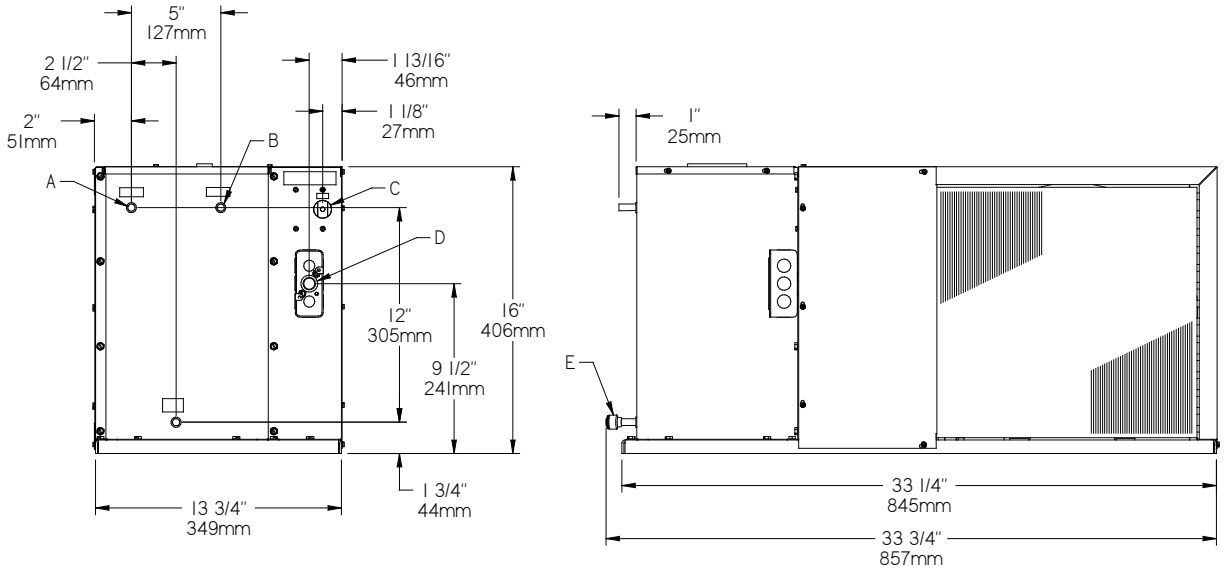

LEGEND

A = 3/8" O.D. TUBE WATER INLET **C = TEMPERATURE ADJUSTMENT** **E = 3/8" O.D. TUBE TANK DRAIN**
B = 3/8" O.D. TUBE WATER OUTLET **D = ELECTRICAL**

ITEMIZED PARTS LIST

ITEM NO.	PART NO.	DESCRIPTION
1	28165C	Box - Insulation
2	28218C	Base Assy
3	28166C	Panel
4	28167C	Panel - Front
5	23158C	Cover - Insulation Box
6	27702C	Cabinet
7	35882C	Control - Cold
8	35793C	Fan Motor
9	31180C	Fan Blade
10	31181C	Fan Bracket
11	66620C	Condenser
12	66621C	Drier
*13	36308C	Compr. Service Pak
14	98763C	Kit - OL/Cover/Brkt/CSIR
15	28408C	Panel - Rear
16	30039C	Electrical Box
17	35895C	Freeze Control
18	30040C	Electrical Box Cover
19	0000000257	Kit - Compr Mtg/Grommets/Wshrs
20	34783005	Washer - Lock
21	66624C	Evaporator Assy
22	70772C	Drain Plug
23	98852C	Kit - Heat Exchanger/Drier
24	70020C	Nut
25	36043C	Wire - #14Ga. White
26	36044C	Wire - #14Ga. Black
27	36046C	Wire - #14Ga. Black
28	36200C	Wire - #14Ga. Black
NS	36047C	Wire - #18Ga. Green

*INCLUDES COMPRESSOR, OVERLOAD & CSIR BOX ASSEMBLY. IF UNDER WARRANTY, REPLACE WITH SAME COMPRESSOR USED IN ORIGINAL ASSEMBLY. NOTE: All correspondence pertaining to any of the above water cooler or orders for repair parts MUST include model number and serial number of cooler, name and part number of replacement part.

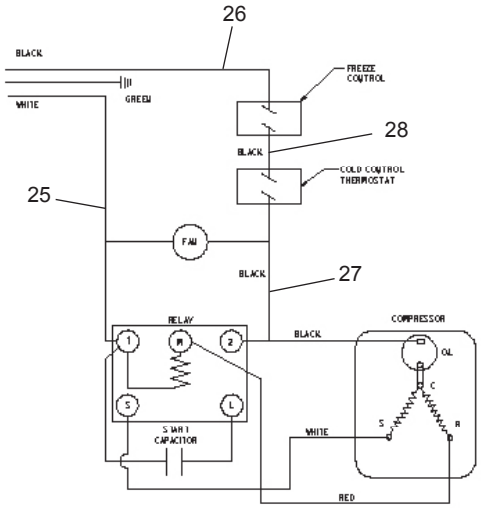

220V-50/60HZ
Wiring Diagram

TROUBLE SHOOTING AND MAINTENANCE

Temperature Control: Factory set for 50°F water under normal conditions. To adjust water temperature, turn screw on Item No. 7 clockwise for colder, counterclockwise for warmer.

Ventilation: Cabinet louvers and condenser fins should be periodically cleaned with a brush, air hose, or vacuum cleaner. Excess dirt or poor ventilation can cause no cold water and compressor cycling on the overload protector.

Lubrication: Motors are lifetime lubricated.

Actuation of Quick Connect Water Fittings: Cooler is provided with lead-free plug which utilizes an o-ring seal. To remove plug from cooler, relieve water pressure, pull the collar towards the fitting and pull the fitting off the tube. To install plug, push fitting straight onto tubing until it reaches a positive stop, approximately 3/4".

OPERATION OF QUICK CONNECT FITTINGS

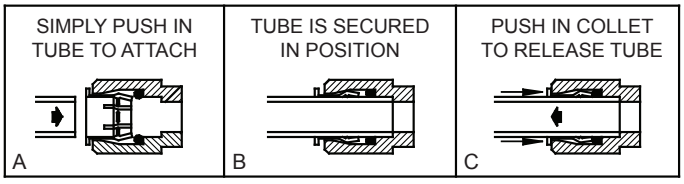

PUSHING TUBE IN BEFORE PULLING IT OUT HELPS TO RELEASE TUBE

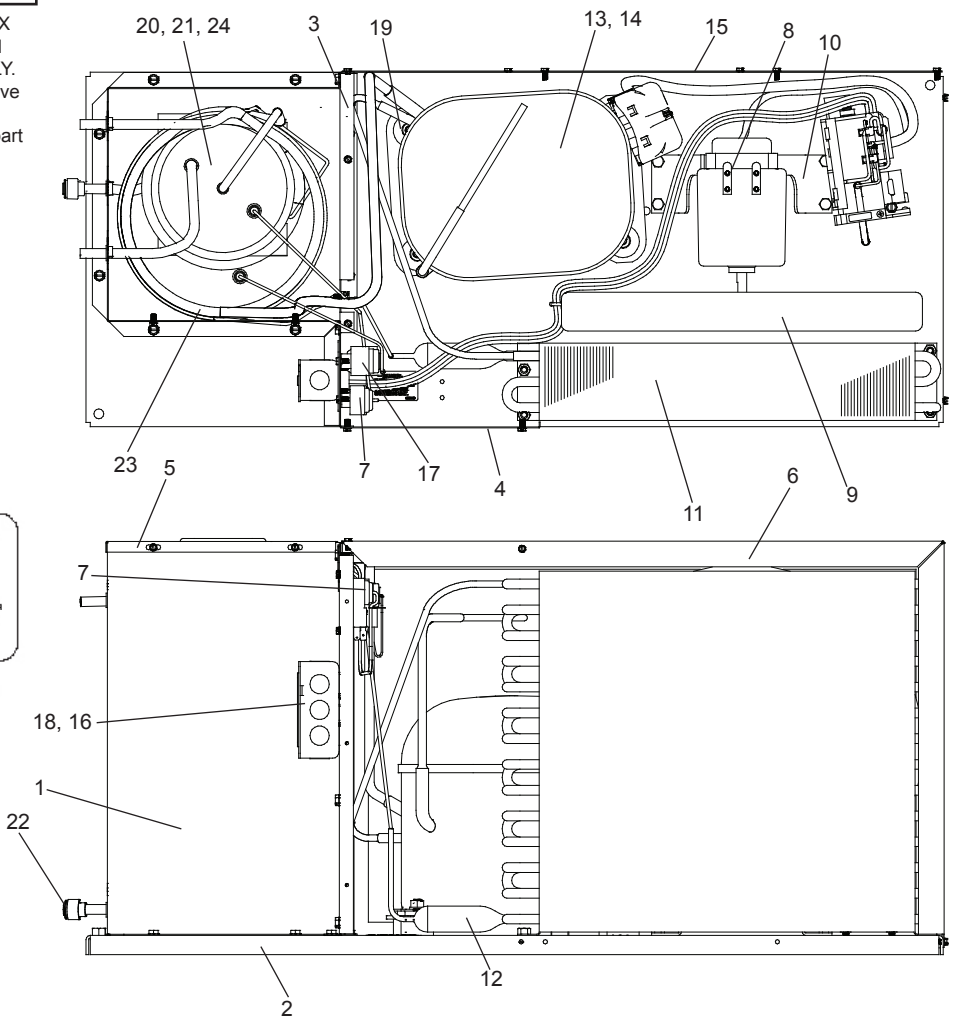

FOR PARTS, CONTACT YOUR LOCAL DISTRIBUTOR OR CALL 1.800.834.4816
REPAIR SERVICE INFORMATION TOLL FREE NUMBER 1.800.260.6640
ELKAY MANUFACTURING COMPANY • 2222 CAMDEN COURT • OAK BROOK, IL 60523 • 630.574.8484